Installation Instructions
For set 2.3106, 2.3107 & 2.3114
Front or Rear Control Arm Bushings
1997-2006 Jeep Wrangler TJ

ENERGY SUSPENSION®
1131 VIA CALLEJON, SAN CLEMENTE, CA 92673

© 2020 Energy Suspension. All rights reserved.
May not be reproduced, in any form, or by any means, without the written consent of Energy Suspension.

Do not remove the factory metal shells from the upper control arms, they must be reused. New inner metal sleeves are supplied for the upper control arms. To remove the old rubber and inner sleeves from the factory shells, apply light heat evenly around the outside of the control arm, just enough to break the bond with the rubber. When you see light smoke coming from the sides of the bushing the bond should be broken. **At no time should there be any flames coming from the rubber.** If there are any flames, you need to back off with the heat. Push the old rubber and inner metal sleeve out. Let the control arm and outer metal shells cool off before cleaning.

The thrust washers are designed to prevent the control arm from walking side-to-side by accepting side load pressure created during hard cornering. Most kits contain more than one part #. It is very important to install them at the correct location. **See illustration for your set #.**

Set # 2-3106

Position	Part #
1	3354 bushing 15.10.243.39 Sleeve (.750x.406x2.038)
Driver side	3363 thrust washer bushing
Passenger	3362 thrust washer bushing
2	3354 bushing 15.10.243.39 Sleeve (.750x.406x2.038) 3353 thrust washer bushing
3 & 4	3301 bushing 15.10.237.39 Sleeve (.875x.562x2.600) 3300 thrust washer bushing

Set # 2-3107

Position	Part #
1 & 2	3354 bushing 3352 thrust washer bushing 15.10.243.39 sleeve (.750x.406x2.038)
3 & 4	3301 bushing 3300 thrust washer bushing 15.10.237.39 sleeve (.875x.562x2.600)

Set # 2-3114

Position	Part #
1	3354 bushing 15.10.243.39 Sleeve (.750x.406x2.038)
Driver side	3363 thrust washer bushing
Passenger	3362 thrust washer bushing

IMPORTANT:

Coat urethane bushing, sleeve and shell I.D. lightly with supplied grease. (all surfaces of bushings that contact metal)

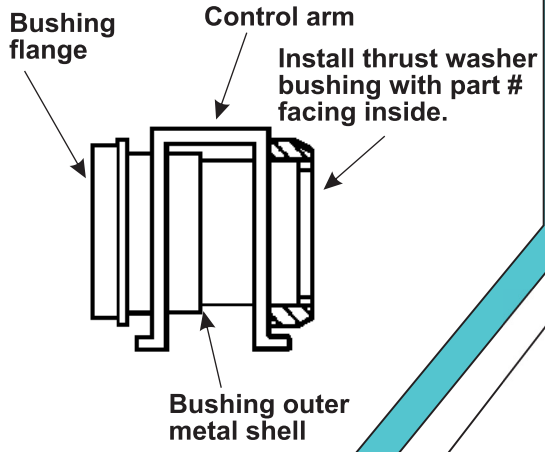

Do not remove outer metal shells from control arms or the Upper axle positions, they must be reused for this bushing set to work.

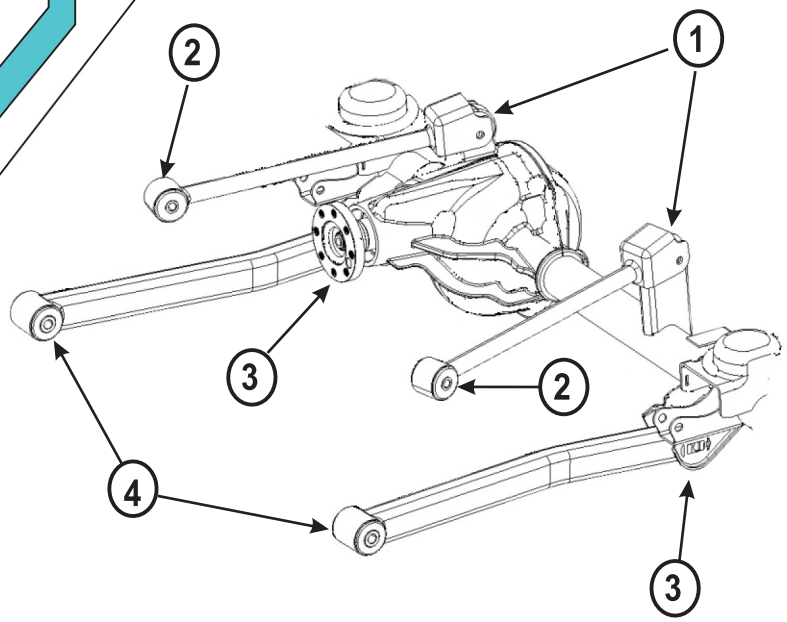

Note:
When reusing original shells, make sure inside surfaces are free of all old bushing material.

17280
19/NOV/20 BRH ECN 20073