INSTALLATION INSTRUCTIONS
RACK AND PINION BUSHING SET
8.10103
01-04 TOYOTA TACOMA
2WD - W/PRERUNNER MODEL & 4WD
96-02 TOYOTA 4-RUNNER
2WD & 4WD

ENERGY SUSPENSION®
1131 VIA CALLEJON, SAN CLEMENTE, CA 92673

© 2015 Energy Suspension. All rights reserved.
May not be reproduced, in any form, or by any means, without the written consent of Energy Suspension.

1.) Lock steering wheel to prevent it from rotating, before loosening any fasteners. Raise front of vehicle and support properly, allowing easy access to steering rack location.

2.) Remove rack attaching bolts, tie-rod end from driver side steering knuckle, and remove rubber bushings.

3.) Install new bushings and sleeves as shown in diagram. Note: 1 3/4" flat washer must be installed between driver side rack bushing and vehicle crossmember.

4.) Position steering rack for installation, being sure not to damage bushings. Install "U" bracket over the "D" shaped bushing on passenger side rack mount. Begin tightening the fastener on the driver side location and the fasteners on the passenger side location until the sleeve in the center mount location aligns with the mounting holes in the crossmember.

5.) Install bolt in the center mount location. Install tie-rod end in the driver side steering knuckle.

6.) Tighten all fasteners to factory specifications. Install new lock pin in driver side tie-rod end.

VIEW FROM FRONT OF VEHICLE LOOKING REARWARD

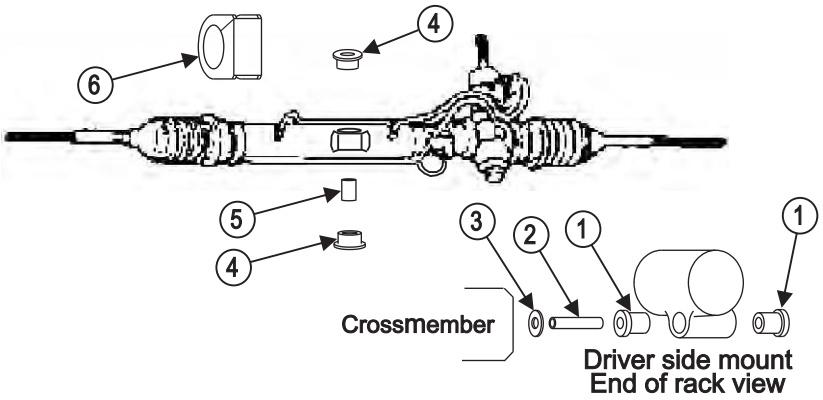

1 - Large bushing, #10041, driver side mount (2ea)
2 - Sleeve #15.10.563.39 (.875" O.D. x .640" I.D. x 2.575 Lg.)(1ea)
3 - Washer #15.03.21.39 (1.750" O.D. x .625" I.D. x .125" Thk.)(1ea)
4 - Small bushing, #10032, center mount position (2ea)
5 - Sleeve #15.10.508.39 (.875"O.D. x .688"I.D. x 1.270" Lg.)(1ea)
6 - "D" bushing, #10031, passenger side position (1ea)

17497 26/AUG/15 BRH ECN 15087

INSTALLATION INSTRUCTIONS
RACK AND PINION BUSHING SET
8.10103
01-04 TOYOTA TACOMA
2WD - W/PRERUNNER MODEL & 4WD
96-02 TOYOTA 4-RUNNER
2WD & 4WD

ENERGY SUSPENSION®
1131 VIA CALLEJON, SAN CLEMENTE, CA 92673

© 2015 Energy Suspension. All rights reserved.
May not be reproduced, in any form, or by any means, without the written consent of Energy Suspension.

1.) Lock steering wheel to prevent it from rotating, before loosening any fasteners. Raise front of vehicle and support properly, allowing easy access to steering rack location.

2.) Remove rack attaching bolts, tie-rod end from driver side steering knuckle, and remove rubber bushings.

3.) Install new bushings and sleeves as shown in diagram. Note: 1 3/4" flat washer must be installed between driver side rack bushing and vehicle crossmember.

4.) Position steering rack for installation, being sure not to damage bushings. Install "U" bracket over the "D" shaped bushing on passenger side rack mount. Begin tightening the fastener on the driver side location and the fasteners on the passenger side location until the sleeve in the center mount location aligns with the mounting holes in the crossmember.

5.) Install bolt in the center mount location. Install tie-rod end in the driver side steering knuckle.

6.) Tighten all fasteners to factory specifications. Install new lock pin in driver side tie-rod end.

VIEW FROM FRONT OF VEHICLE LOOKING REARWARD

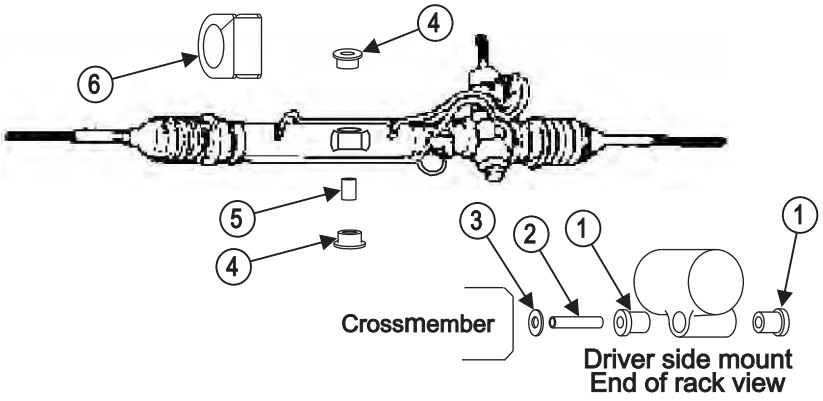

1 - Large bushing, #10041, driver side mount (2ea)
2 - Sleeve #15.10.563.39 (.875" O.D. x .640" I.D. x 2.575 Lg.)(1ea)
3 - Washer #15.03.21.39 (1.750" O.D. x .625" I.D. x .125" Thk.)(1ea)
4 - Small bushing, #10032, center mount position (2ea)
5 - Sleeve #15.10.508.39 (.875"O.D. x .688"I.D. x 1.270" Lg.)(1ea)
6 - "D" bushing, #10031, passenger side position (1ea)

17497 26/AUG/15 BRH ECN 15087