Installation instructions
For set # 8.7105
07-08 Toyota FJ Cruiser
03-08 Toyota 4Runner
03-08 Lexus GX 470

ENERGY SUSPENSION®
1131 VIA CALLEJON, SAN CLEMENTE, CA 92673

© 2008 Energy Suspension. All rights reserved.
May not be reproduced, in any form, or by any means, without the written consent of Energy Suspension.

It is recommended that if you are unfamiliar with this type of work that you refer to a qualified service center specializing in this type of work. It is also recommended that if you choose to do this work yourself that a factory service manual be obtained for the proper procedures pertaining to removal, replacement and proper torque specifications for your vehicle. This instruction set is intended as a guideline for the safe installation of Energy Suspension's polyurethane bushings, once you have removed the factory components from your vehicle. Energy Suspension recommends that you **read over all the installation instructions** and check all P/N's and quantities in the parts list **before you start.** Call customer service at 949-361-3935 if the parts in your kit do not match this parts list.

Rear Track Rod

Parts list:
4 - 2772 (track rod bushing)
2 - 15.10.405.39
(sleeve 1.00"O.D. x .563"I.D. x 1.960"LG)
2 - 9.11108 (grease).
1 - 17538 (this instruction sheet).

Apply grease to all metal parts that contact the polyurethane bushings.

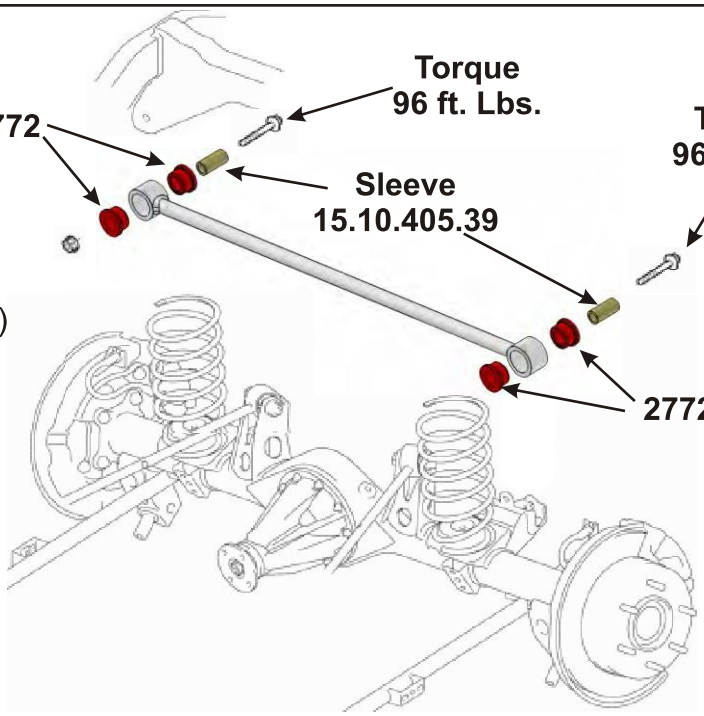

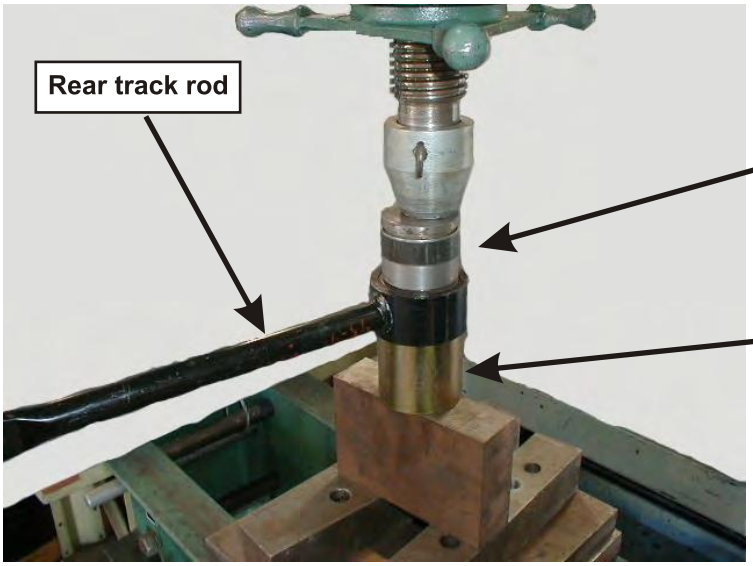

Inside Diameter of track rod is 1.417" (36mm). Push out old bushing with something smaller than 1.417".

Outside Diameter of original bushing is 1.417" (36mm). The inside of receiver needs to be bigger than 1.417".

When pressing out the original bushing, you need to push it with something smaller than the inside of the track rod. And the receiver end needs to be bigger than the outside of the old bushing being pushed out.